Wireless Monitoring System For Industrial Machines

Sakshi Shinde | Payal Nirpal | Samruddhi Gaikwad

Department of Electronics and Telecommunication Engineering
Jayawantrao Sawant College of Engineering, Pune, India

Abstract —The Wireless Monitoring System *for industrial Machines aims to enhance industrial efficiency enabling real-time monitoring of machine status using ESP32 and LoRa communication. In this system, multiple slave nodes connected to individual machines detect their operational status (On/Off) and transmit the data wirelessly to the master node. The master unit collects and Displays the information, allowing supervisors to monitor machine activity remotely. This approach eliminates the need for manual supervision, reduces downtime ,and supports predictive maintenance .The use of LoRa technology ensures long-range, low power data transmission ,making the system highly suitable for large scale industrial environment. the proposed system offers a cost effective scalable and reliable solution for improving industrial productivity and automation. The advancement of the internet of Things has transformed the field of industrial automation, making machine monitoring and predictive maintenance more intelligent and data driven. Traditional maintenance techniques such as reactive and preventive maintenances often lead to unexpected machine , high downtime,and increased operational costs. To overcome these limitations,an Iot based monitoring system is developed to continuously observe machices .These sensors are interfaced with an ESP32 microcontroller,which serves as the central controls unit for data collections.*

I. INTRODUCTION

In today rapidly evolving industrial environment, continuous monitoring of machines is essential to ensure high productivity , operational safety and efficient maintenance. Industrial machines operate for long durations under varying load conditions and any unexcepted failure can lead to production loss increased maintenance coast and safety hazards . Ther-fore real time monitoring of machines operational status has become a critical requirement in modern industries. Traditional machine monitoring system are mostly wired and require complex cabling skilled installation, and regular maintenance. These system are costly , inflexible, and difficult to expand, especially in large industrial plants where machines are distributed over wide areas. This proposed system consists multiple slave nodes and a single master node .Each slave node is connected to an data is transmitted .

II. LITERATURE REVIEW

Several researches have explored different wireless communications technologies for IOT-Based predictive Maintenance. LoRa-Based systems have proven to be highly effective for long range data transmission with low power consumption making them suitable for remote industrial sites such as oil fields and power plants. Studies show that LoRa networks can efficiently transmit sensors data over long distances using minimal energy .On the other hand, Wi-fi Based system are widely used in smart factory environments where high speed data transmissions and real time monitoring are required. Microcontroller like ESP8266 and ESP32 are often used to collect sensors data and send it to cloud servers for further Analysis.

[1] Wireless sensors systems for motors faults detections – Medina-Garcia show combined use of vibrations motors current to detect motors faults andReducess downtime; their architecture illustrates benefits of multi-parameter sensing supports using ACS712 current monitoring plus additional sensors in yours slave nodes to improve diagnosis beyond simple ON/OFF Detection.

[2] Predictive maintenance surveys (Industry 4.0)-Recent surveys summarize trends in IoT enabled predictive maintenance showing that integrating IoT sensing edge processing and cloud analytics increases uptime an OPEX .These recommend architectures that combine locals events Detection cloud dash-Board for trends analysis

[3] LoRa protocols and real-time extension for Industrial controls – Works on RT-LoRa protocols examine latency and reliability tradeoffs for industrial monitoring and controls they propose protocols levels approaches to improves determinism over LoRa for time sensitive events For your projects ,LoRa is good fit;for tighter controls loops or hard real time ,consider protocols extensions or hybrid networks

[4] Advanced LoRa topologies and mesh approaches on microcontrollers – Newer works (2024-2025) demonstrates gateways free LoRa mesh amd self healing networks builts on ESP32 to increses resiliences and coverage in industrial settings where gateways are impractical.If your plant layout or EMI environments challenges single gateways coverage mesh or muli-hop solutions are worth exploring single gateways coverage increses ESP32 plant layouts are exploring.

[5] ACS712 current sensing IOT monitoring-
Multiple studies and implementation evaluate ACS712 performance for real- time current monitoring with microcontrollers and discuss calibration, noise filtering and RMS measurement techniques. This supports using ACS712 at the slave node for ON/OFF detection and current-based fault detection but also implies you should apply filtering and calibration to improve accuracy.

Overall, the literature reveals a strong trend toward smart, connected and autonomous monitoring systems.by combining IOT with AI, cloud computing, and edge processing, modern predictive maintenance solutions can detect issues early, optimize maintenance cycles, and improve productivity. Future research is expected to address the challenges of standardization , interoperability, and cybersecurity while enhancing system intelligence and scalability for industrial applications.

III. SYSTEM DESIGN AND METHODOLOGY

1.System Design:

The proposed system for wireless monitoring of industrial machines is designed using ESP32 microcontroller integrated with LoRa communication modules. The system consists of two main sections: the transmitter unit and the receiver unit.

The transmitter unit includes sensors such as temperature, vibration, and voltage /current sensors connected to the ESP32. These sensors continuously monitor the condition of industrial machines and send real-time data to the microcontroller. The EZSP32 processes this data and transmits it wirelessly using the LoRa module.

The receiver unit consists of another ESP32 connected with a LoRa module, which received the transmitted data. The received data is then displayed on a serial monitor, LCD, or sent to a cloud platform such as Thing speak or Blynk for remote monitoring. A relay module can also be control machines Based on predefined conditions.

2.Methodology:

1.Machine status and parameter sensing:

Industrial machines are integrated with sensing circuits to monitor their operational condition. The system mainly detects machine ON/OFF status by sensing electrical signals such as current flow or control line signals.

Additional parameters like operating duration can also be derived based on machine activity.

2.Signal conditioning and isolation:

The raw signals obtained from industrial machines are often high voltage or AC in nature and cannot be directly applied to a microcontroller.

Therefore, relay module and converter circuits are used to isolate the machine signals and convert them into safe low - voltage DC logic levels. This ensures protection of ESP32and reliable signal detection.

3.Data acquisition and processing using EWP32:

Each slave node uses an ESP32 microcontroller to continuously read the conditioned machine status signals. The ESP32 processes the input data, Determines whether the machines is ON or OFF , and prepares the data packet for wireless transmission.

The microcontroller also manages timing and node identification.

4.Wireless Data Transmission using LoRa communication:

The processed machine status data is transmitted wirelessly from slave nodes to the master node using LoRa (SX1278) module. LoRa technology enables long-range

Communication with low power consumption , making it suitable for industrial environments where machines are spread over large areas.

5.Time stamping and data logging:

The master ESP32 receives data from all slave nodes and timestamps it using an RTC module for accurate logging.

6.Monitoring and Visualization:

The monitoring and visualization unit displays real-time ON/OFF status of machines on a dashboard or display using data received via LoRa . It enables quick supervision of multiple machines from a central location and helps in reducing downtime.

VI.HARDWARE COMPONENTS

A. Microcontroller ESP32(Master and Slave);
1.Acts as the main processing and control unit.
2.The master receives data from slave nodes; slaves read sensor data and transmit it via LoRa.

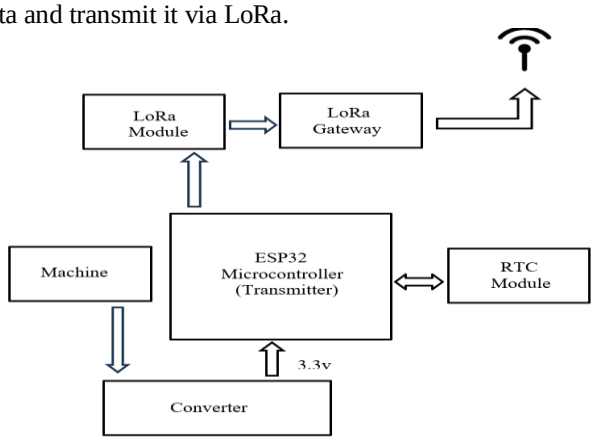

Fig1.Block diagram of transmitter

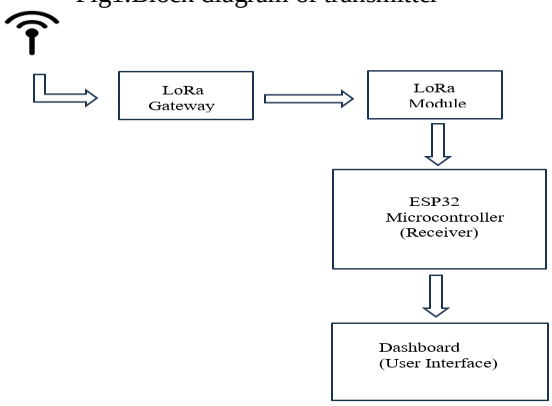

Fig 2.Block Diagram of receiver

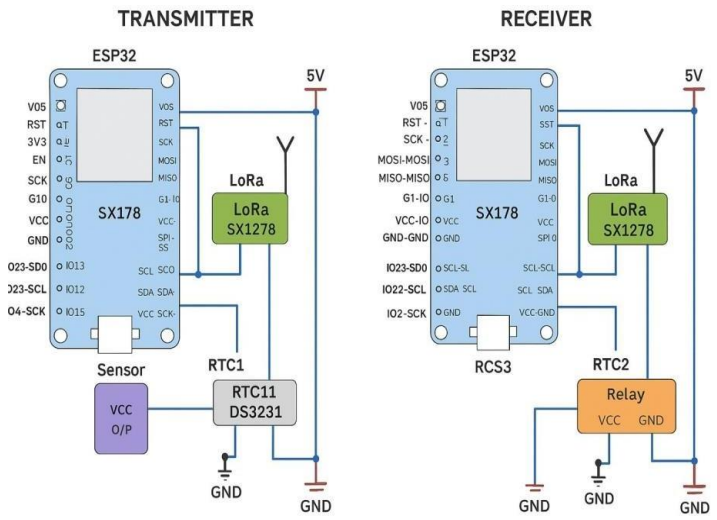

Fig. 1. Circuit diagram for master and slave connectivity

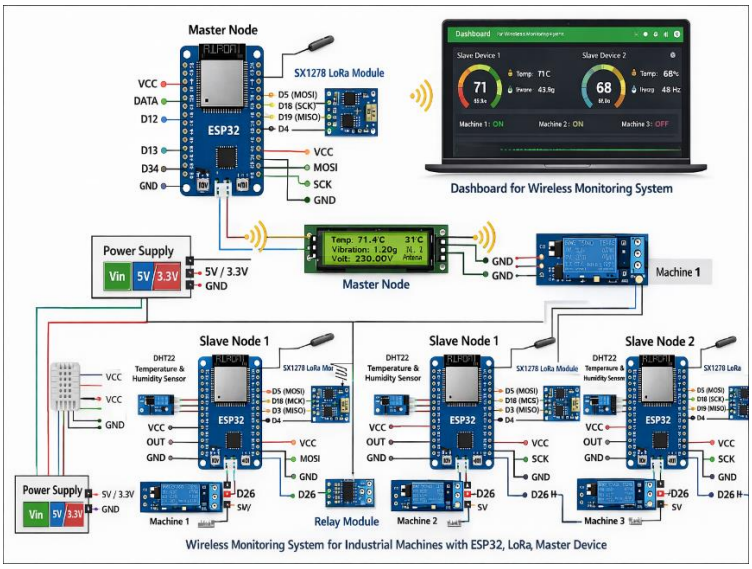

Fig. 2. Circuit diagram of LoRa module interfacing and microcontroller connection

B. LoRa controller (Master and Slaves):
Provides long-range wireless communication between master and slave node, Operates typically at 433 MHZ or 868MHZ frequency.

C.RTC Module (DS3231):
1.Maintains accurate time and date for logging machine ON/OFF times.
2.Interfaced with the master ESP32.

D. Voltage Regulator (5v and 3.3v):
1.convert 12v input into 5v and 3.3v regulated DC outputs.
2.5v is used for sensors and Modules; 3.3v powers ESP32 and LoRa Module.

E. Power supply unit:
1.Provides required voltage (5V/3.3V) to components
2.can be a regulated adapter or battery.
3.voltage regulators may be used for stable supply.

f. Relay Module:
A relay module is an electrically operated switch that allow a low-power device the ESP32 to control high -voltage or high-current industrial machines safely.

IV. SOFTWARE IMPLEMENTATION

The software implementation of the wireless monitoring system was carried out using the Arduino IDE to program the ESP32 microcontroller. The embedded c ode was written in C/C++and included libraries for sensor interfacing, LoRa communication, and data processing. The ESP32 was programmed to collect real-time data from sensors such as temperature, vibration , and voltage sensors, process the data, and transmit it using the LoRa module(e.g.,SX1278).On the receiver side , another ESP32 with a LoRa module was used to receive the transmitted data and display it on serial monitor or send it to a cloud platform such as Thing Speak or Blynk for remote monitoring. The system used SPI communication protocol for interfacing the LoRa module with ESP32. Proper error handling and data validation techniques were implemented to ensure reliable communication cation. Additionally, the software was optimized for low power consumption by incorporating sleep modes and efficient data transmission intervals, making the system suitable for continuous industrial monitoring applications.

V. RESULTS AND DISCUSSION

The developed wireless monitoring system using ESP32 and LoRa was successfully implemented and tested for industrial applications. The System demonstrated reliable data transmission of parameters such as temperature, vibration and voltage over long distances with minimal packet loss. It achieved a communication range up to 2-5 km in open areas and around 5- 800 meters in industrial environment with obstacles The use of LoRa technology ensured low power consumption, making the system suitable for continuous operation. Real-time monitoring was effectively achieved through the ESP32 with only minor delays in data transmission The accuracy of the sensor readings was found to be satisfactory, with deviations within ±2-5% compared to standard instruments. However, a reduction in signal strength was observed in the presence of heavy machinery and metallic obstructions, and the data rate was lower compared to conventional technologies like Wi-Fi. Despite these limitations, the system proved to be stable, cost-effective, and scalable making it highly suitable for large -scale industrial monitoring and predictive maintenance applications.

VI. ADVANTAGES

1. Support predictive maintenance (early fault detection).
2. Reduces down time and improve productivity.
3. Improves safety by increasing human interventions.
4. Better data collection and analysis for efficiency.
5. Easy installation (no complex wiring required).
6. Remote access from anywhere.

VII. FUTURE SCOPE

The future scope of then wireless monitoring system for industrial machines is very promising as it can be further improved by integrating advanced technologies. The system can be connected with Industrial Internet of Things platforms to enable smarter and more efficient industrial automation. In the future, artificial intelligence and machine learning techniques can be used to analyze the collected machine data and predict possible machine failures before they occur, enabling predictive maintenance. A dedicated mobile application can also be developed to allow users to monitor machine performance and receive instant alerts conveniently. Cloud-based data analytics can be used to store and large volumes of industrial data to improve decision making and operational efficiency. The system can also be expanded by adding more sensors to monitor additional machine parameters such as pressure, humidity, noise, and energy consumption. Furthermore, the system can be integrated with smart factory and Industry 4.0 technologies to support fully automated industrial environments with improved security and efficiency.

VIII. CONCLUSION

The wireless monitoring system for industrial machines provides an efficient solution for real-time monitoring of machine parameters such as temperature, vibration, current, And voltage. The system uses sensors, a microcontroller, and wireless communication technology to collect and transmit machine data to a remote monitoring platform. This allow operators to observe machine performance from a remote location and detect abnormal conditions at an early stage. The system helps reduce manual inspection, improve maintenance planning, and minimize machine downtimes. It also enhances Industrial productivity and safety by providing accurate and continuous monitoring of machine conditions. Overall, the wireless monitoring system is a reliable and cost-effective approach that support modern industrial automation and improves operational efficiency.

IX. REFERENCES

[1] **Research on IOT Based Industrial Monitoring and ProtectionSystem.Available:https://www.ijraset.com/research-paper/research-on-iot-based-industrial-monitoring-and-protection-system**

[2] **LoRa Based Industrial Environment Monitoring System**. **https://www.ijisrt.com/lora-based-industrial-environment-monitoring-system**

[3] **Smart Monitoring and Controlling of Appliances using LoRa Based IOT System. Available: https://www.mdpi.com/2411-9660/5/1/17**

[4] **"Industrial Monitoring and Control Using LoRa Communication**," ***IJHS*,5 nov.2022.Available: https://sciencescholar.us/journal/index.php/ijhs/article/view/7200 Science Scholar**

[5] **"Lora module-based industrial parameter monitoring systemUsingIOT,"2025.Available: https://ijsrem.com/download/lora-module-based-industrial-parameter-monitoring-system-using-iot/ ijsrem.com**